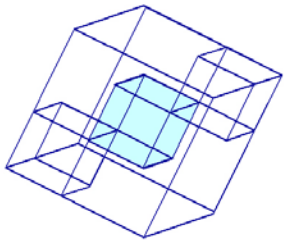

TECHNISCHE UNIVERSITÄT ILMENAU

AQORD:

Adaptive QoS Routing

Demonstrator

TU Ilmenau

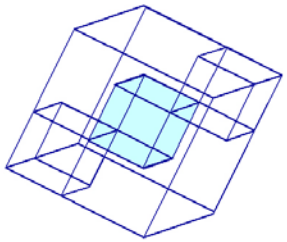

TECHNISCHE UNIVERSITÄT ILMENAU

AQORD: Architecture

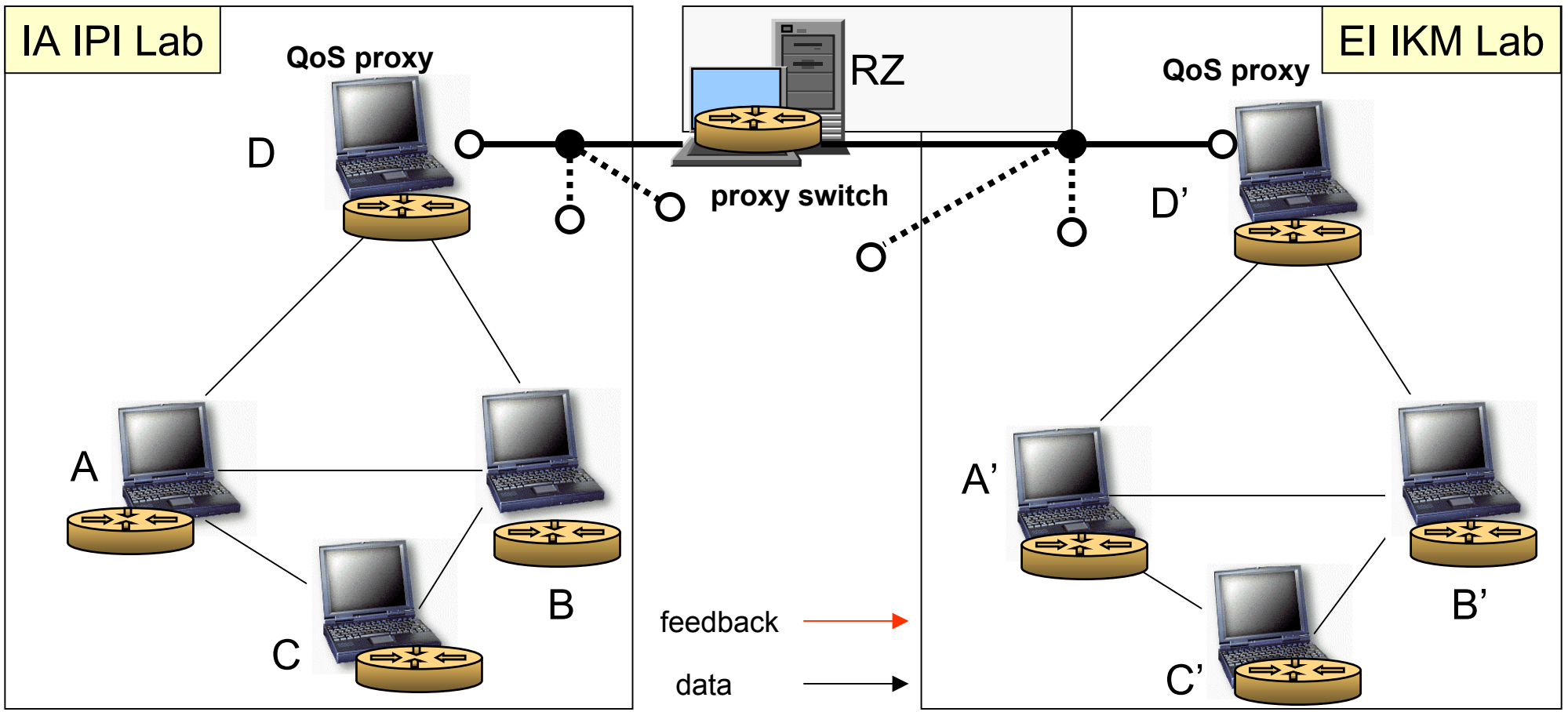

AQORD: Route # 1a

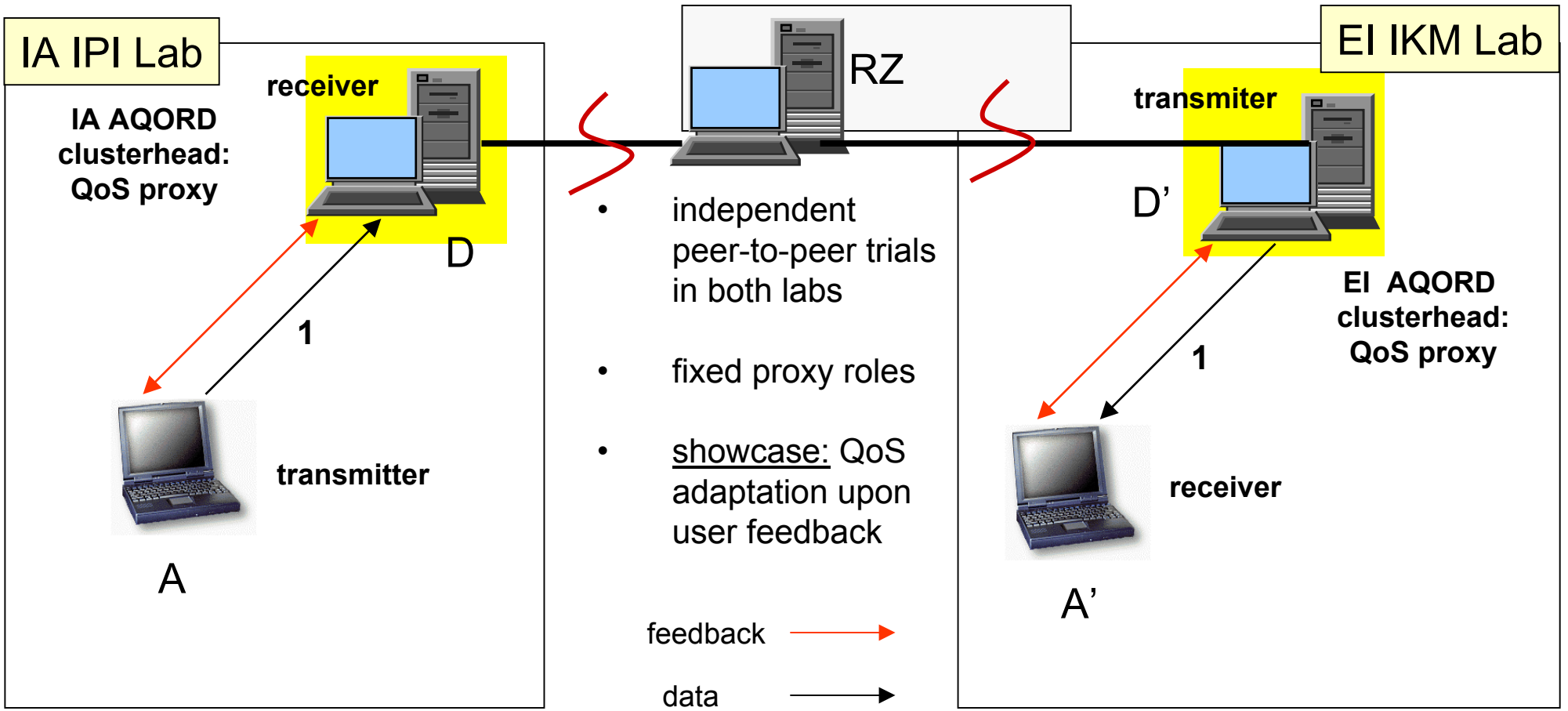

- independent peer-to-peer trials in both labs
- fixed proxy roles
- <u>showcase:</u> QoS adaptation upon user feedback

AQORD: Route # 1b

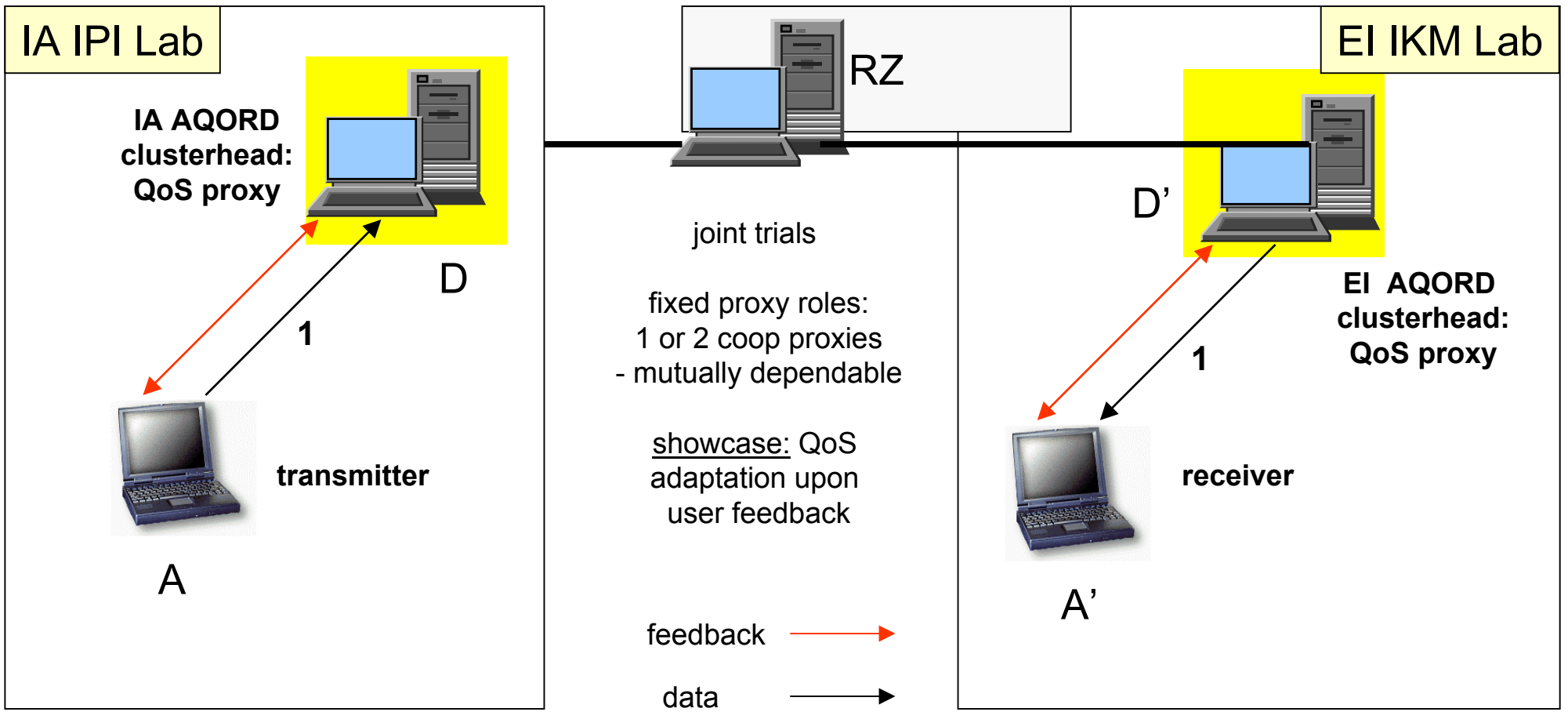

AQORD: Route #2a

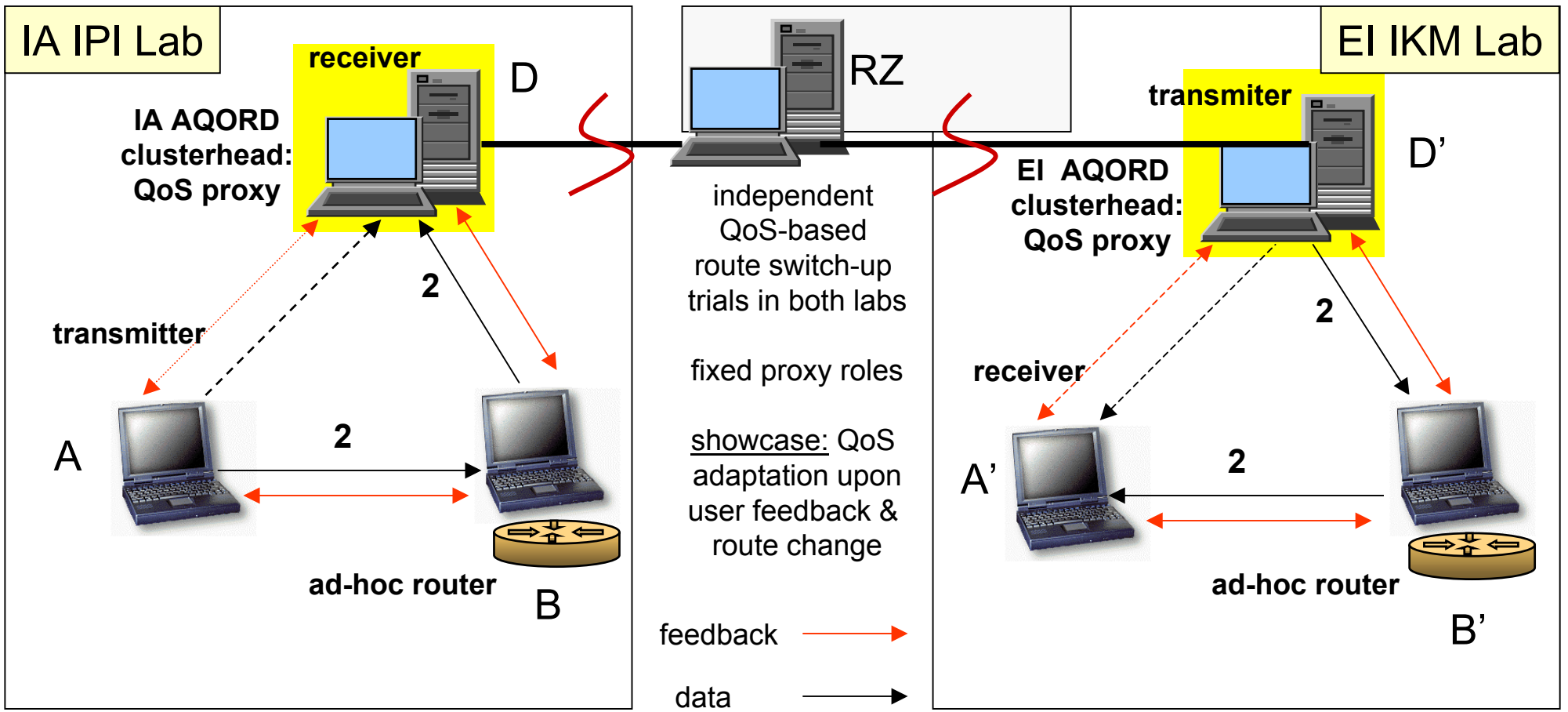

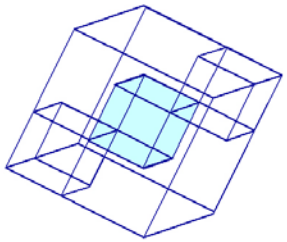

TECHNISCHE UNIVERSITÄT ILMENAU

AQORD: Route #2b

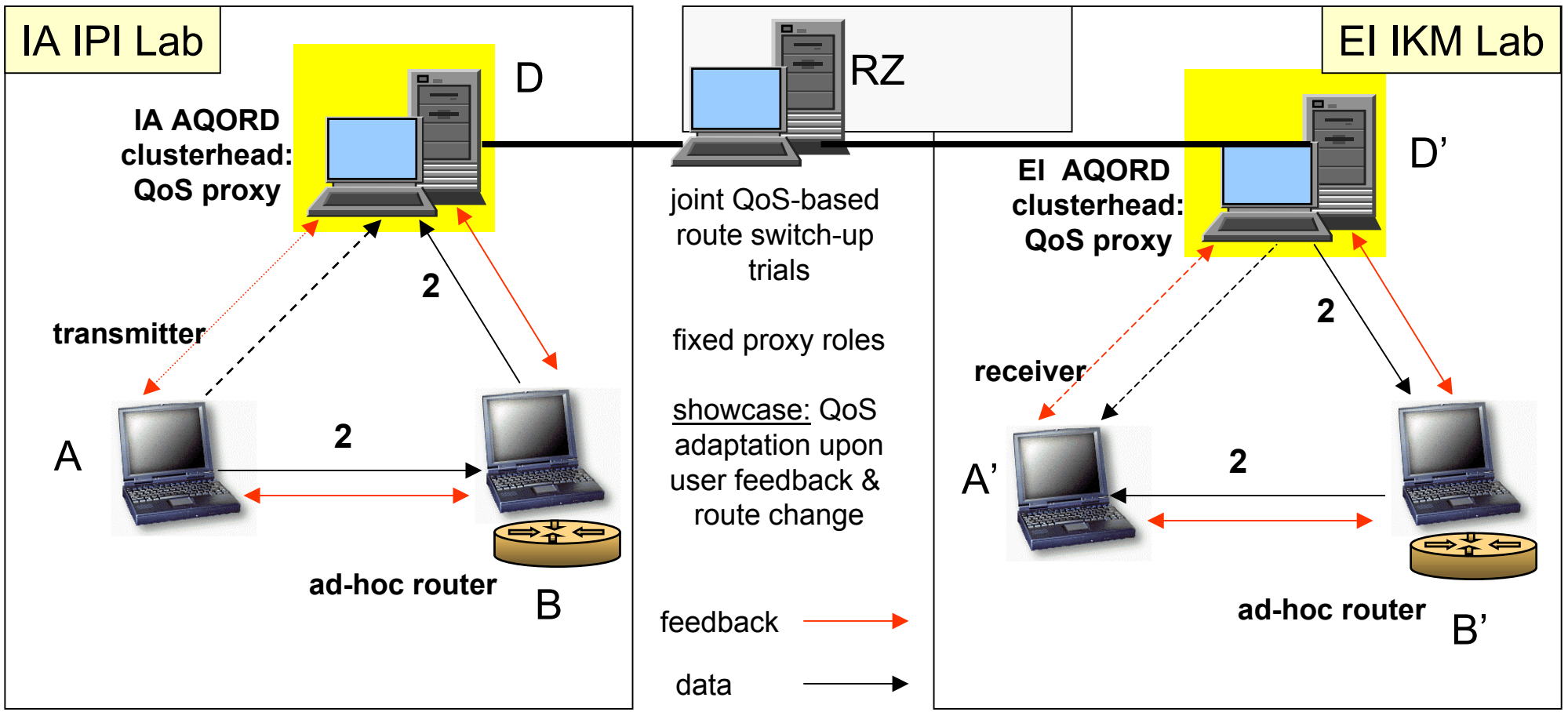

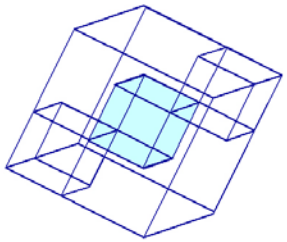

TECHNISCHE UNIVERSITÄT ILMENAU

AQORD: Route #2c

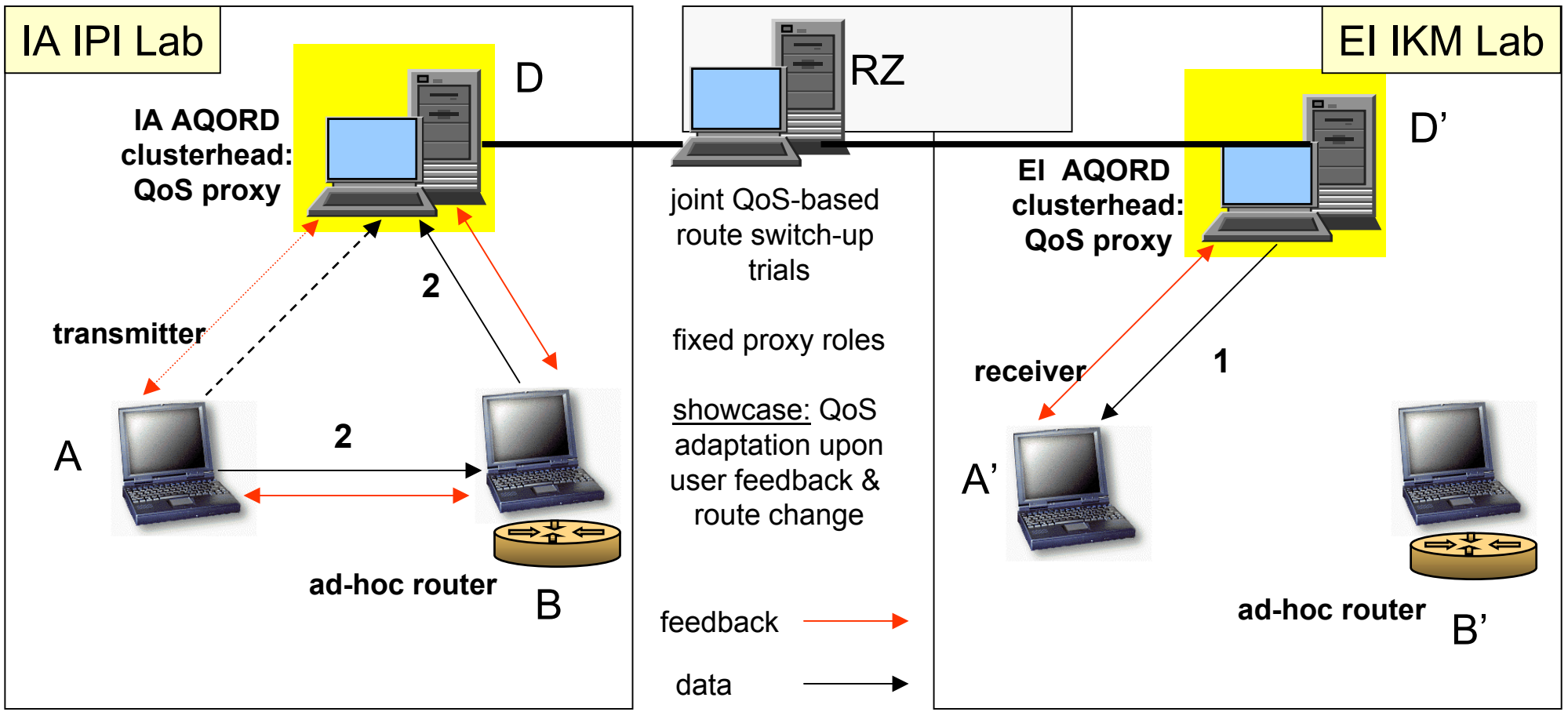

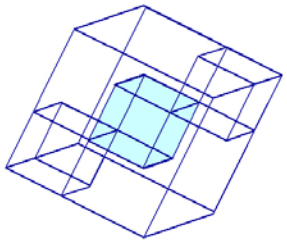

TECHNISCHE UNIVERSITÄT ILMENAU

AQORD: Route #2d

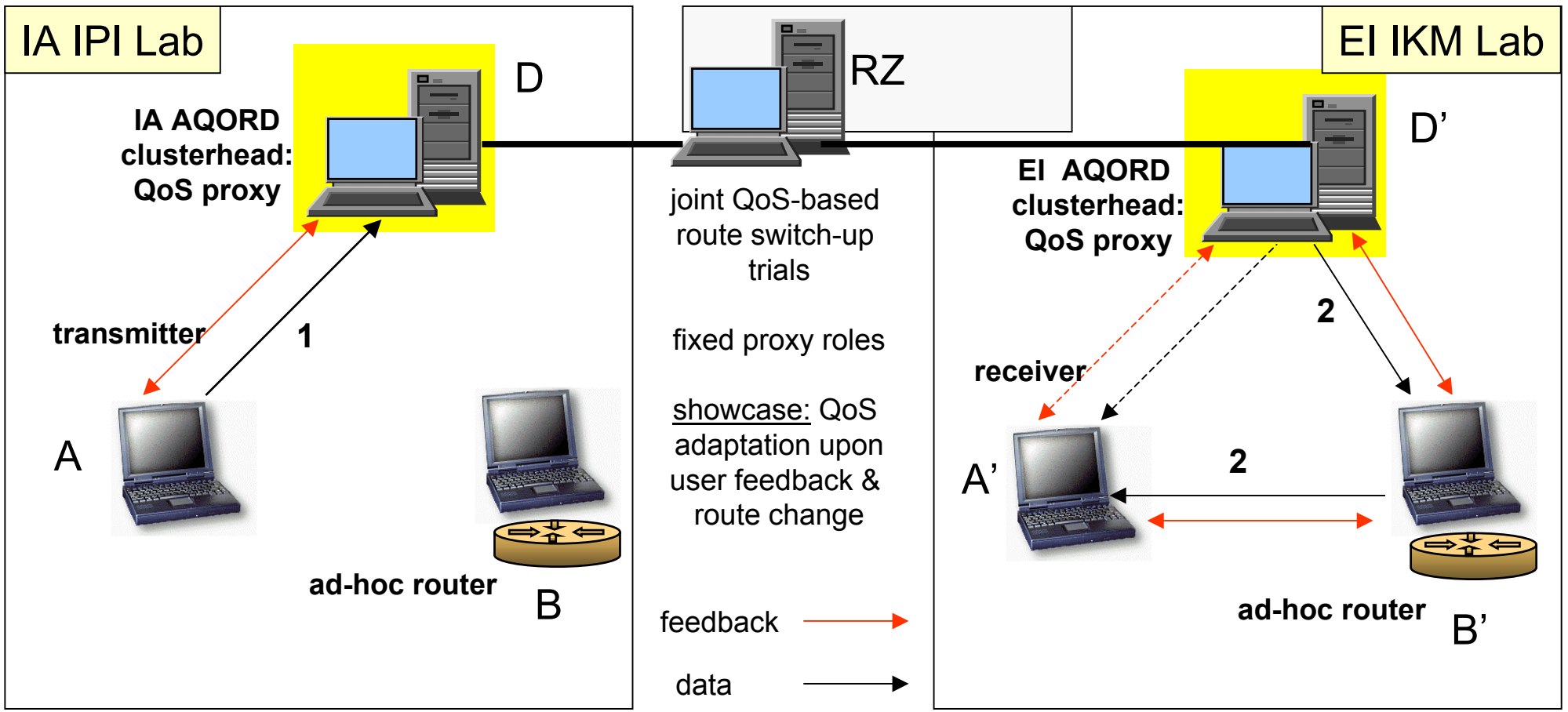

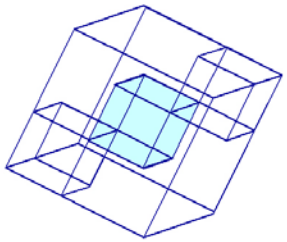

TECHNISCHE UNIVERSITÄT ILMENAU

AQORD: Route #3a

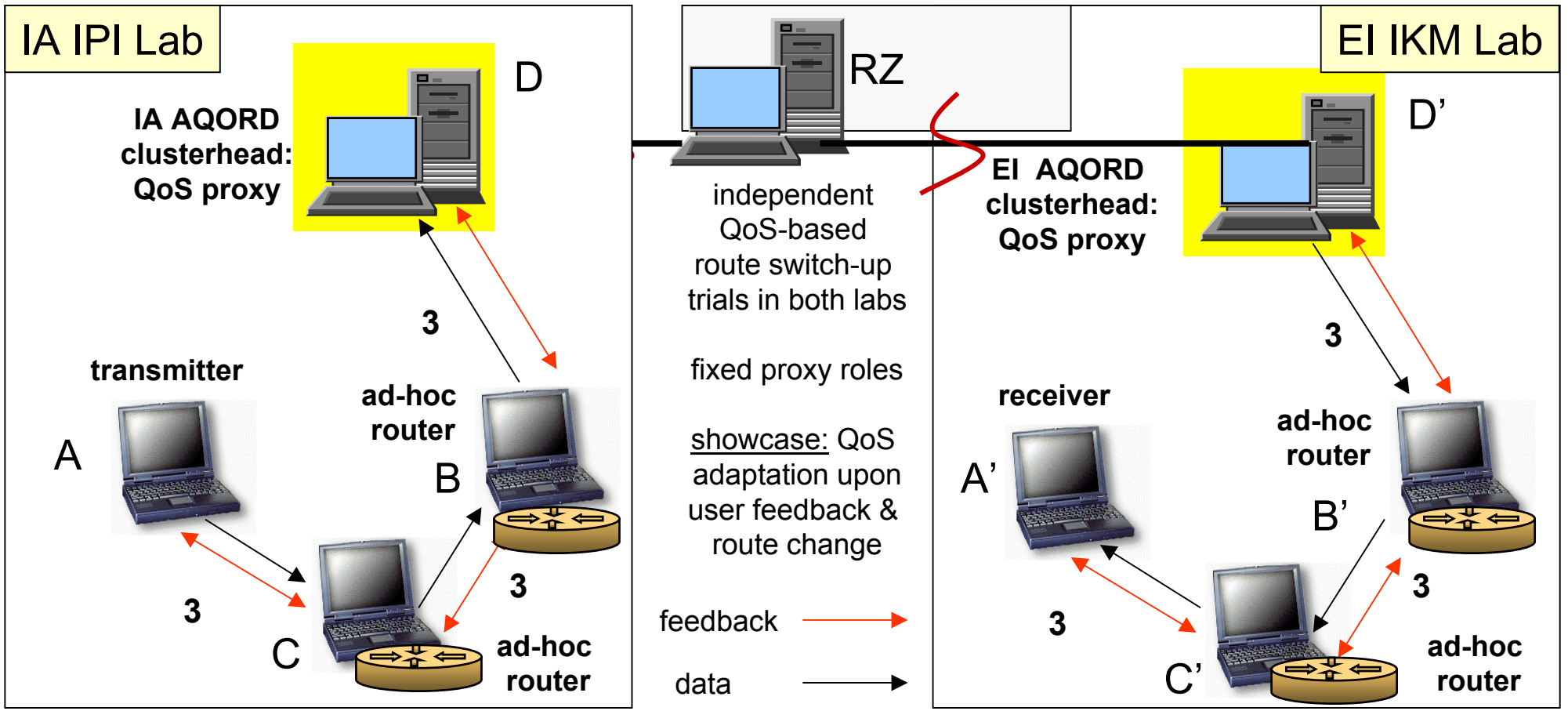

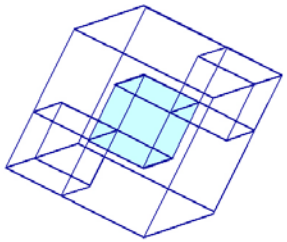

TECHNISCHE UNIVERSITÄT ILMENAU

AQORD: Route #3b

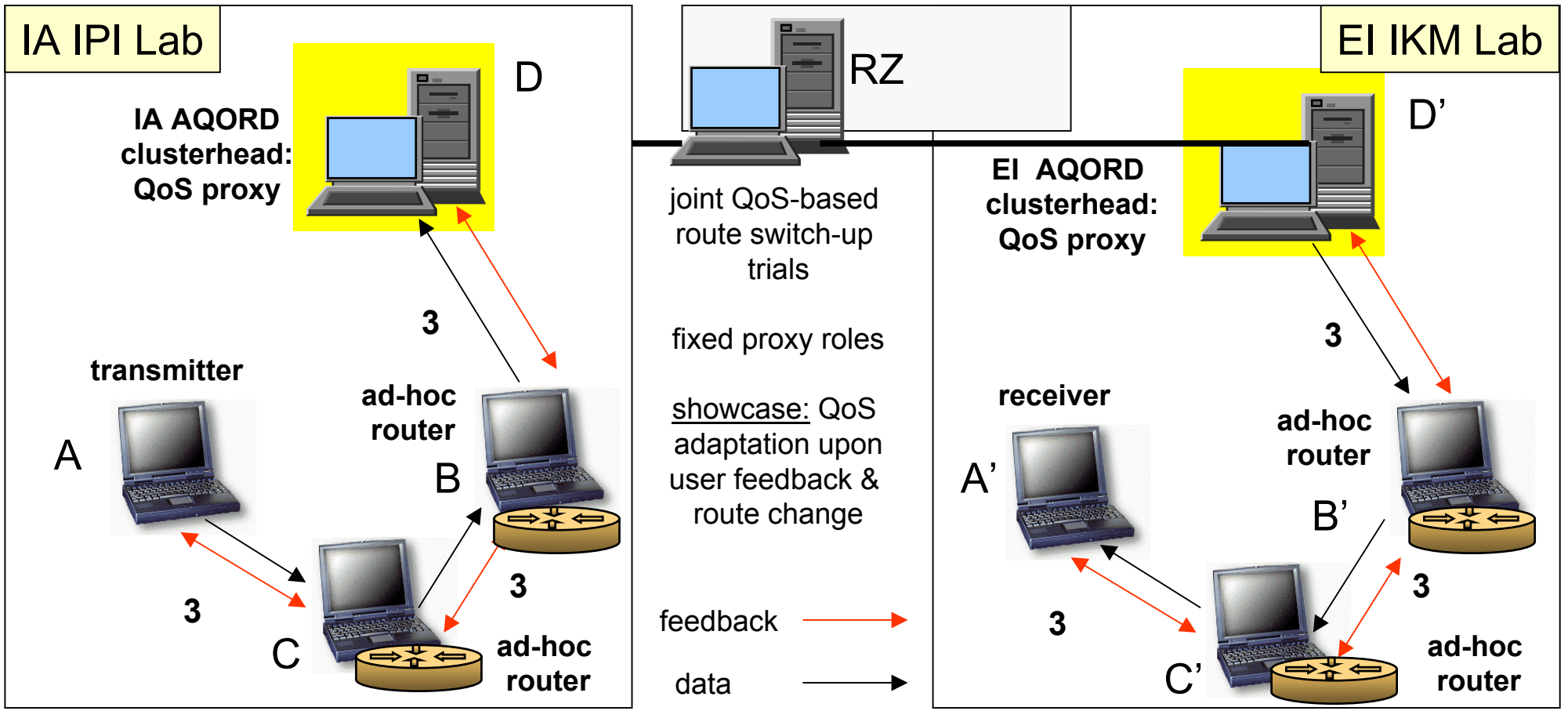

AQORD: Routes #3c,d,e,f,g,h,I,j,k

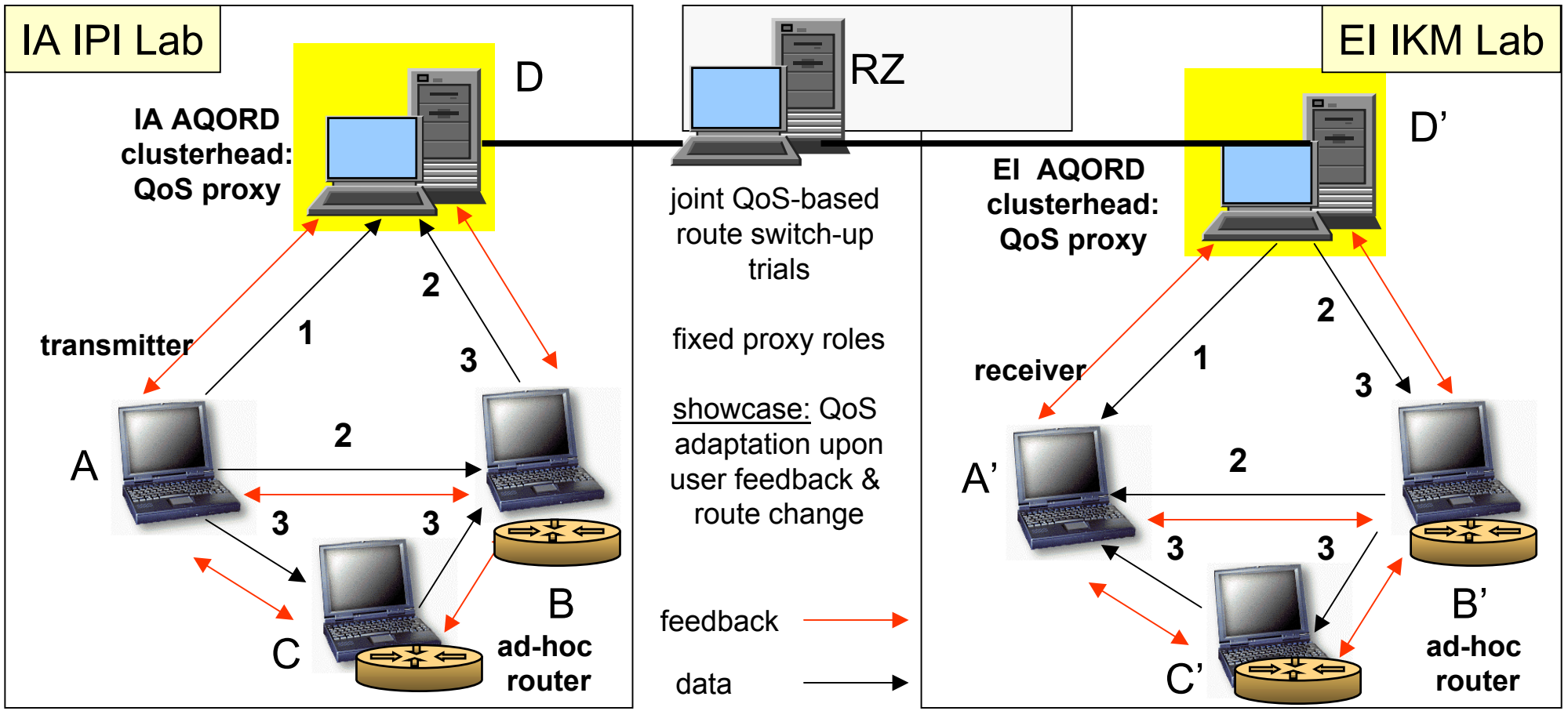

AQORD: Routes #4 …

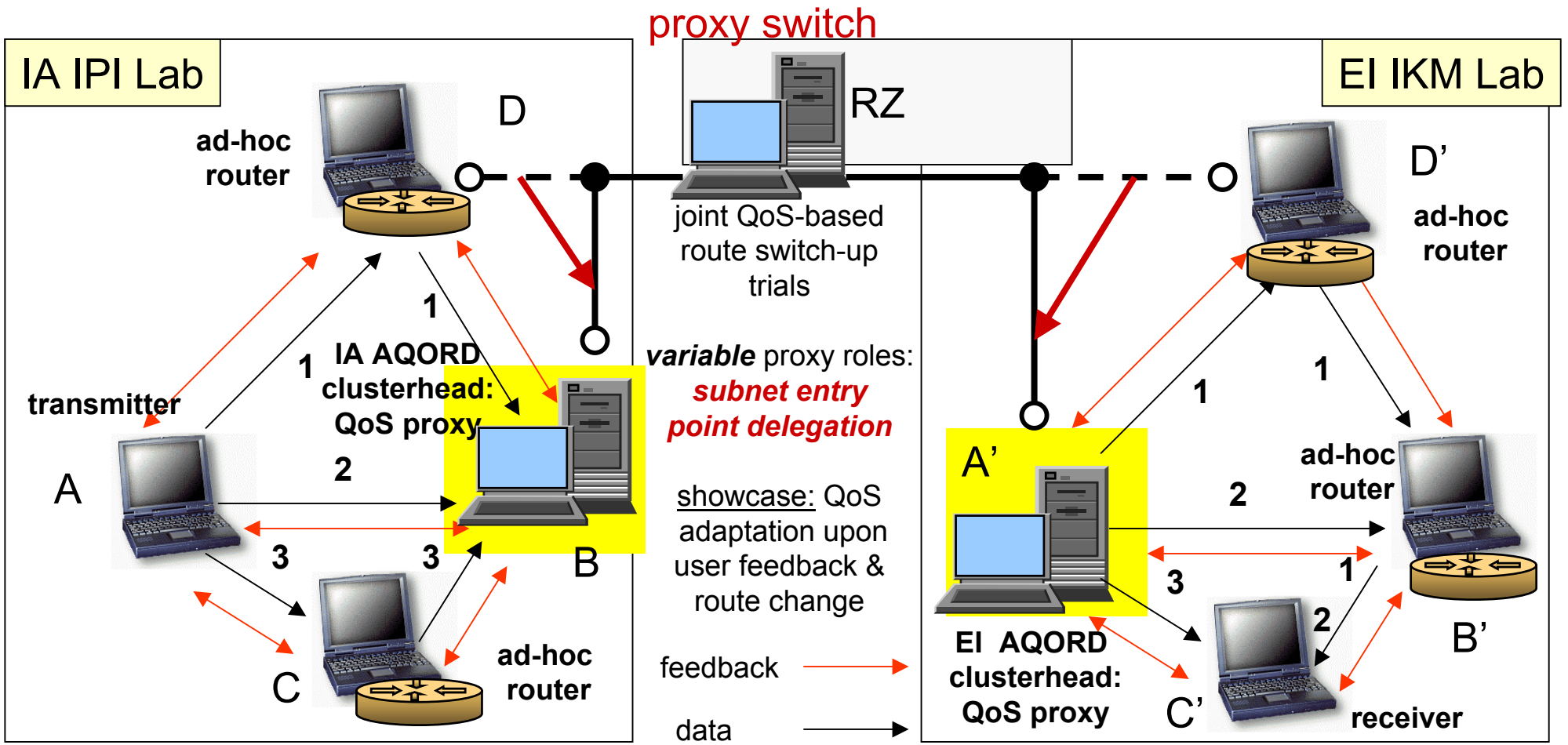

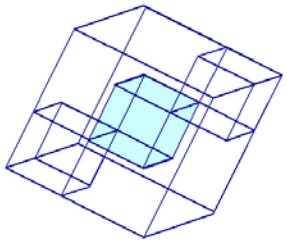

TECHNISCHE UNIVERSITÄT ILMENAU

AQORD Engineering Issues: First Steps

1. Development & Test Environment (OS base): selection – decision required

- MS Windows 2000
- Linux
- both (dual boot)
- both (one as a VM application, e.g. VMware**)**

2. Multimedia Application: selection – decision required

- Video
- Audio
- Video + Audio

3. Infrastructure, Equipment, Simulation & Test Tools: selection – decision required

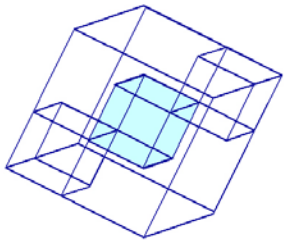

TECHNISCHE UNIVERSITÄT ILMENAU

AQORD Organization Issues

1. Overall Project Plan: selection – decision required

- duration
- resources
- milestones

2. Interdepartment Project Manager : selection – decision required

- overall project plan & coordination
- task allocation
- PR + Marketing
- resources

3. Interdepartment Workshop Plan : tbd by 2.